JUNAMA

exclusive prams

PRODUCER OF PRAMS AND ARTICLES FOR CHILDREN

CATALOGUE **2020**

• CANDY • **DIAMOND** • DIAMOND S-LINE • **INDIVIDUAL** • MIRROR • **FLUO LINE** • ONYX • **GLOW** • SAPHIRE •

PL

Od wielu lat obecna jest na rynku oferta ekskluzywnych wózków dziecięcych marki JUNAMA. Junama to szeroka gama innowacyjnych produktów oparta na oryginalnym wzornictwie. Łącząc nowoczesne technologie z własnymi rozwiązaniami stworzyliśmy produkty, w których wszystko jest przemyślane i przewidziane. Oferta marki Junama skierowana jest do klientów doceniających nowoczesność, niepowtarzalny styl oraz zaawansowane technologie wytwarzania artykułów dziecięcych. Troska o każdy detal i nieustanne poszukiwanie nowych doskonalszych wzorów, rozwiązań i inspiracji sprawiły iż marka Junama kojarzona jest z prestiżem i ekskluzywnością.

ENG

For many years JUNAMA has been present on the market of exclusive prams. Junama is a wide range of innovative products based on original design. Combining modern technologies with our own solutions, we have created products which are perfectly improved. The Junama brand's offer is addressed to customers who appreciate modernity, unique style and advanced technologies of making children's products. Detailing and constant search more perfect designs, solutions and inspirations have made the Junama brand associated with prestige and exclusivity.

IT

Da molti anni è presente sul mercato una vasta gamma di passeggini esclusivi del marchio JUNAMA. Junama offre prodotti innovativi basati su un design originale. Unendo le moderne tecnologie con le nostre soluzioni, abbiamo creato prodotti nei quali ogni dettaglio è ben studiato. L'offerta del marchio Junama è indirizzata ad una clientela che apprezza la modernità, lo stile unico e le tecnologie avanzate nella produzione di articoli per bambini. La cura per ogni particolare e la ricerca costante di nuovi e più perfetti design, di soluzioni ed ispirazioni hanno reso il marchio Junama associato al prestigio e all'esclusività.

JUNAMA
exclusive prams

ES

La gama de cochecitos exclusivos JUNAMA esta disponible en el mercado durante muchos años. Junama es una amplia gama de productos innovadores basados en un diseño original. Combinando tecnologías modernas con nuestras propias soluciones, hemos creado productos en los que todo está pensado y anticipado. La oferta de la marca Junama está dirigida a los clientes que aprecian la modernidad, el estilo único y las tecnologías avanzadas para la producción de artículos para niños. El cuidado de cada detalle y la búsqueda constante de nuevos y mejores diseños, soluciones e inspiración han hecho que la marca Junama esté asociada con prestigio y exclusividad.

42-229 Częstochowa
ul. Jagiellońska 77/79
POLAND
tel: +48 34 371 12 70
www.junama.com

DE

Eine grosse Auswahl von exklusiv Junama Kinderwagen ist seit vielen Jahren auf dem europäischen Markt präsent .Junama hat eine breite Palette innovativer Produkte, die auf ausgefallenem Design und Technik basieren. Durch die Kombination moderner Technologien mit unseren eigenen Lösungen haben wir Produkte entwickelt , in denen alles Perefekt ist für Mutter und Kind . Das Angebot der Marke Junama richtet sich an Kunden, die Modernität, einzigartigen Stil und fortschrittliche Technologien für die Herstellung von Kinderartikeln schätzen. Sorgfalt für jedes Detail und ständige Suche nach neuen, besseren Designs, Lösungen und Inspirationen haben die Marke Junama mit Prestige und Exklusivität in Verbindung gebracht.

RUS

На протяжении многих лет предложение JUNAMA присутствует на рынке детских товаров. Junama - это широкий ассортимент инновационных товаров, основанных на оригинальном дизайне. Объединяя современные технологии с нашими собственными решениями, мы создали продукты, в которых все продумано и обеспечено. Коллекции бренда Junama созданы для покупателей, которые ценят современность, уникальный стиль и передовые технологии изготовления детских товаров. Забота о каждой детали и постоянный поиск новых, более совершенных дизайнов, решений и идей вдохновили создателей бренда Junama.

SET 2 in 1

JUNAMA DIAMOND S-LINE

JUNAMA
exclusive prams

CARRYCOT VERSION

JUNAMA DIAMOND S LINE captivates the observer's attention due to its sophisticated look, smart design and extraordinary diamond shape carrycot.

COLORS:

01

02

03

04

SPORT UNIT

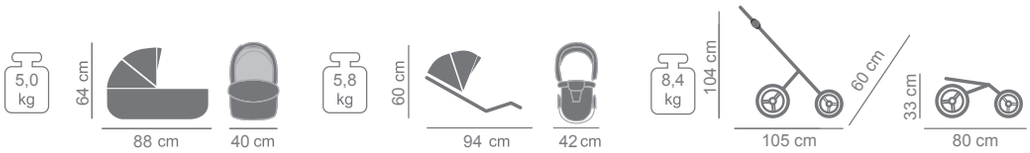

ACCESSORIES

01	02	03	04

PACKAGE 2 in 1	PACKAGE 3 in 1
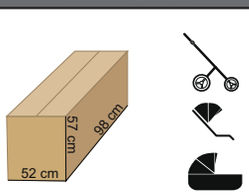	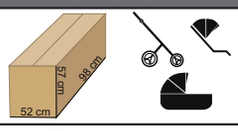
	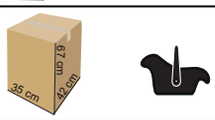

ISOFIX BASE	UNIVERSAL CAR SEAT

FEATURES
OF OUR PRAMS

JUNAMA
exclusive prams

carrycott version

Panel wentylacyjny
Ventilation panel
Belüftungsöffnung
Pannello di ventilazione
Panel de ventilación
Вентиляционная панель

Wodoodporny i odporny na promieniowanie UV materiał
Waterproof and UV reflected material
Wasserdichtes und UV-beständiges Material
Materiale impermeabile e resistente ai raggi UV
Material impermeable y resistente a los rayos UV
Водостойкий и UV -устойчивый материал

System wpięcia Max-Klik
Max-klick plug in system
Max-Klik-Befestigungssystem
Sistema di chiusura Max-Click
Sistema de fijación Max-Klik
Система крепления Max-Click

Regulowany amortyzator
Adjustable shock absorber
Verstellbare, vierfache Gestell Federung
Ammortizzatore regolabile
Amortiguador ajustable
Регулируемый аммортизатор

Dodatkowy amortyzator
Additional shock absorber
Zusätzlicher Federung
Ammortizzatore aggiuntivo
Amortiguador adicional
Дополнительный аммортизатор

Zamykany kosz na zakupy
Shopping basket with zipper
Geschlossene Korb
Cestino per la spesa con serratura
Cesta de la compra con cerradura
Корзина на молнии

FEATURES
OF OUR PRAMS

sport unit

Regulacja rączki o 180 stopni
180° adjustable handle
180-Grad-Griffverstellung

Regolazione della maniglia a 180 gradi
Ajuste de la manija de 180 grados
Регулировка высоты ручки
на 180 градусов

Panel wentylacyjny
Ventilation panel
Belüftungsöffnung

Pannello di ventilazione
Panel de ventilación
Вентиляционная
панель

Przedłużana budka
Extended hood
Doppeltes Verdeck

Cabina prolungata
Cabina extendida
Расширенный капюшон

Odpinany pas krokowy
Detachable crotch-pad
Abnehmbarer Schrittgurt

Cintura passo staccabile
Correa de la entrepierna desmontable
Съемный степперный ремень

Czteropoziomowa regulacja oparcia
4 positions adjustable backrest
Vierfacher verstellbare Rückenlehne

Regolazione dello schienale a quattro livelli
Ajuste del respaldo de cuatro niveles
Четырехуровневая регулировки спинки

Regulowany podnóżek
Adjustable footrest
Verstellbare Fußstütze

Poggiapiedi regolabile
Reposapiés ajustable

SET 2 in 1

DIAMOND S-LINE DUO

JUNAMA
exclusive prams

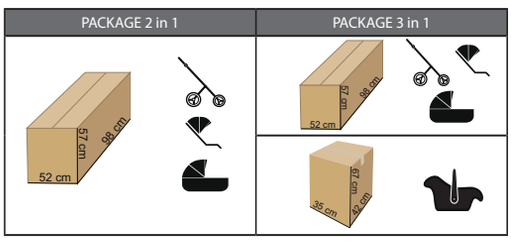

CARRYCOT VERSION

Double happiness, double joy and pride, but also double duties and challenges. In order to meet parents' expectations, we designed two models of twin carriages. Duo Slim constructed in such a way that children can sit one behind the other, another Duo model that allows you to stay side by side.

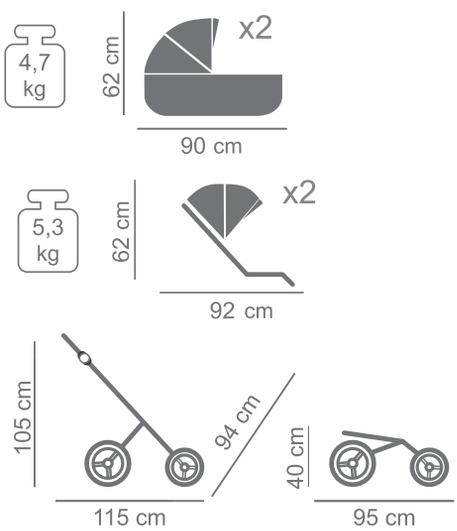

SPORT UNIT

SET 2 in 1

DIAMOND S-LINE DUO SLIM

Double happiness, double joy and pride, but also double duties and challenges. In order to meet parents' expectations, we designed two models of twin carriages. Duo Slim constructed in such a way that children can sit one behind the other, another Duo model that allows you to stay side by side.

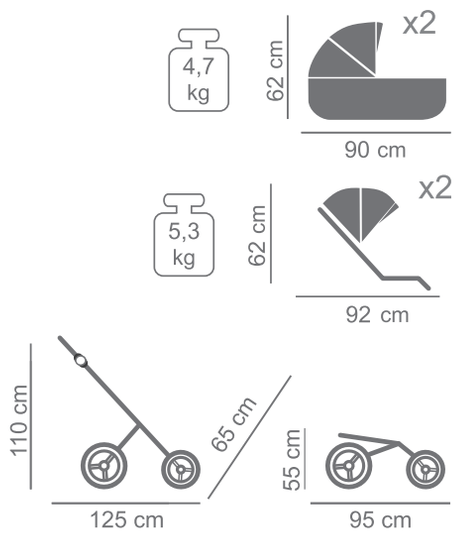

CARRYCOT VERSION

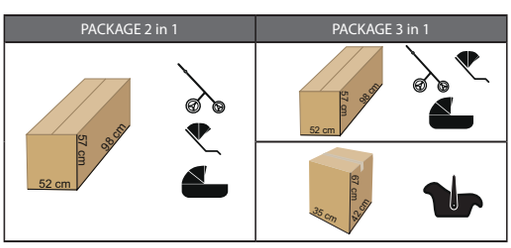

JUNAMA
exclusive prams

SPORT UNIT

SET 2 in 1

JUNAMA INDIVIDUAL

JUNAMA
exclusive prams

CARRYCOT VERSION

Individual is a continuation of the S-line collection modeled on precious stones. Ruby impresses with flames, the sapphire perfectly combines dignified coolness and deep depth, pink gold, this fashionable trend has become part of the fashion canon.

COLORS:

SPORT UNIT

01

02

03

04

05

06

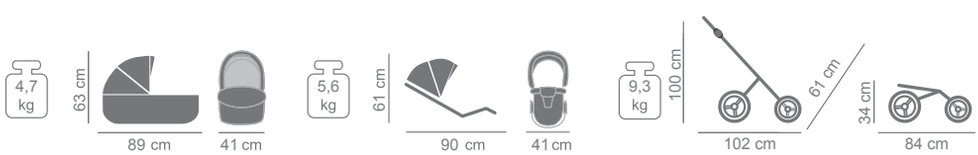

ACCESSORIES

01	02	03	04	05	06

PACKAGE 2 in 1	PACKAGE 3 in 1
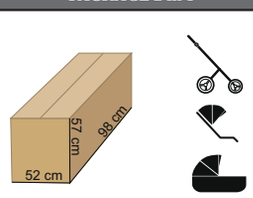	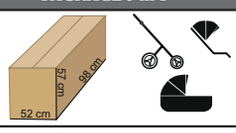 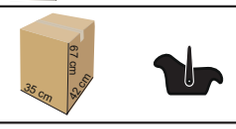

ISOFIX BASE	UNIVERSAL CAR SEAT

JUNAMA
exclusive prams

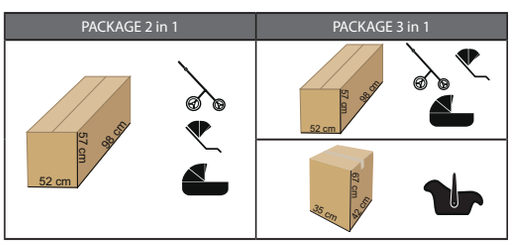

CARRYCOT VERSION

Double happiness, double joy and pride, but also double duties and challenges. In order to meet parents' expectations, we designed two models of twin carriages. Duo Slim constructed in such a way that children can sit one behind the other, another Duo model that allows you to stay side by side.

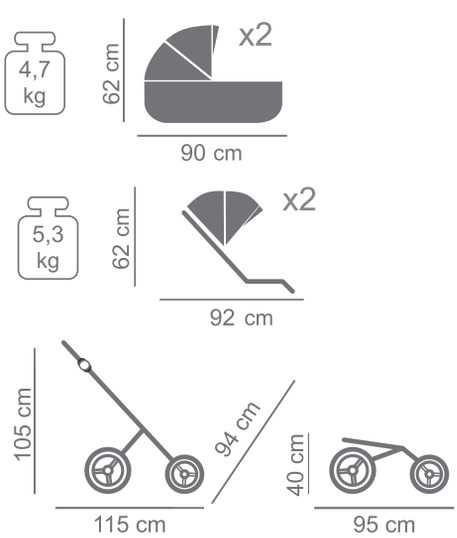

SPORT UNIT

SET 2 in 1

INDIVIDUAL DUO SLIM

Double happiness, double joy and pride, but also double duties and challenges. In order to meet parents' expectations, we designed two models of twin carriages. Duo Slim constructed in such a way that children can sit one behind the other, another Duo model that allows you to stay side by side.

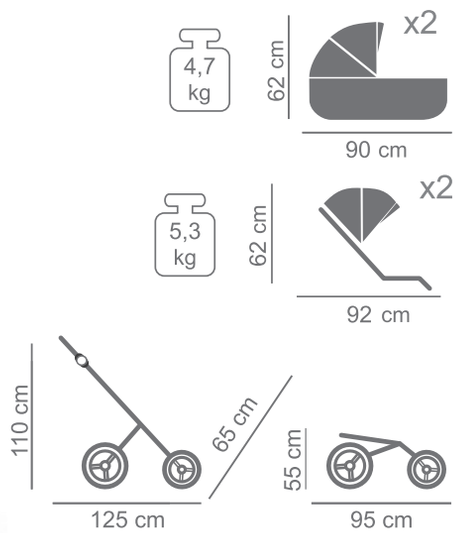

CARRYCOT VERSION

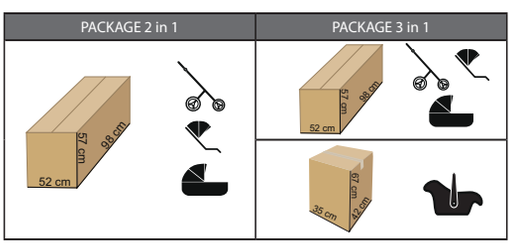

JUNAMA
exclusive prams

SPORT UNIT

SET 2 in 1

JUNAMA MIRROR SATIN

JUNAMA
exclusive prams

CARRYCOT VERSION

Delicate and elegant satin returns to fashion. The Mirror Satin collection is a multidimensional but consistent satin and slightly shimmering carrycot that gives the collection a sophisticated character.

COLORS:

SPORT UNIT

01

02

03

04

05

06

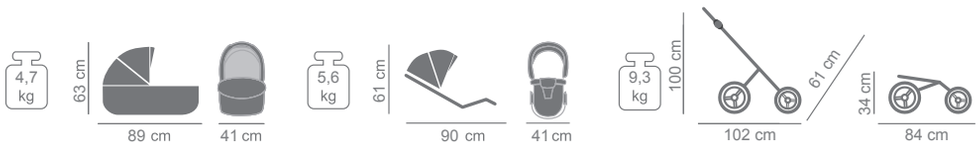

ACCESSORIES

01	02	03	04	05	06

PACKAGE 2 in 1	PACKAGE 3 in 1
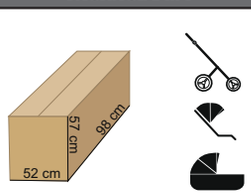	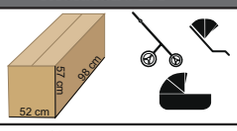 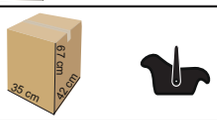

ISOFIX BASE	UNIVERSAL CAR SEAT

MIRROR SATIN DUO

JUNAMA
exclusive prams

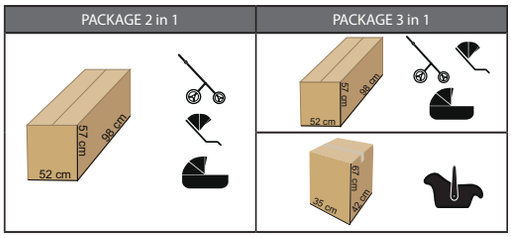

CARRYCOT VERSION

Double happiness, double joy and pride, but also double duties and challenges. In order to meet parents' expectations, we designed two models of twin carriages. Duo Slim constructed in such a way that children can sit one behind the other, another Duo model that allows you to stay side by side.

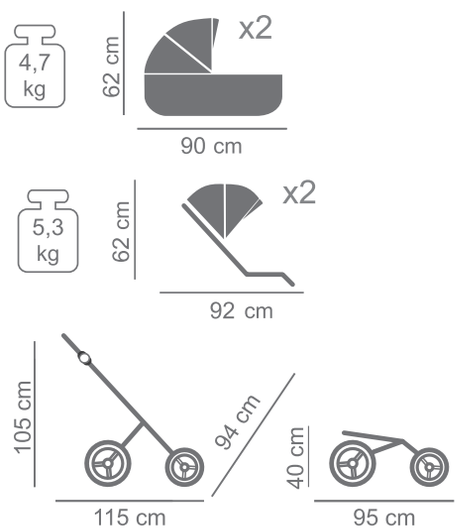

SPORT UNIT

SET 2 in 1

MIRROR SATIN DUO SLIM

Double happiness, double joy and pride, but also double duties and challenges. In order to meet parents' expectations, we designed two models of twin carriages. Duo Slim constructed in such a way that children can sit one behind the other, another Duo model that allows you to stay side by side.

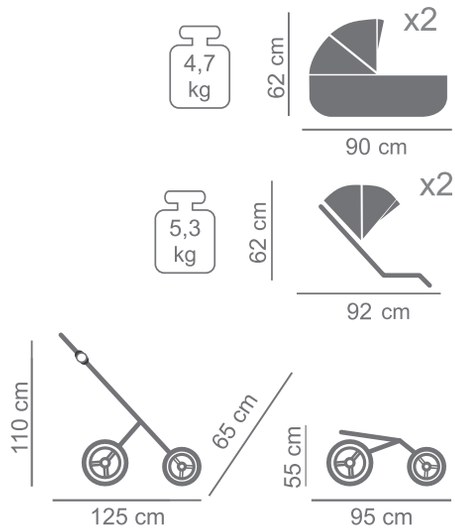

CARRYCOT VERSION

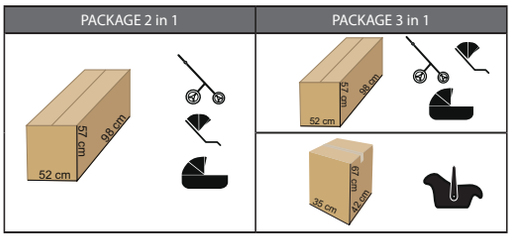

JUNAMA
exclusive prams

SPORT UNIT

SET 2 in 1

JUNAMA MIRROR

JUNAMA
exclusive prams

CARRYCOT VERSION

No glimmer? No way! This trend is gaining more and more fans every year. Strong colors, metallic shades are all included in the Diamond Mirror model.

COLORS:

SPORT UNIT

01

02

03

04

05

06

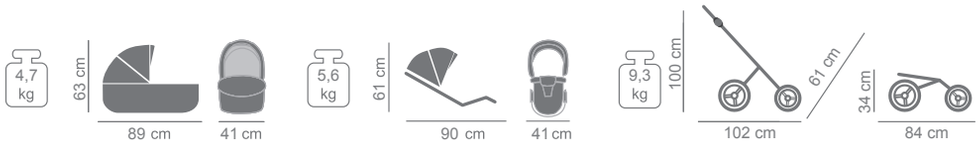

ACCESSORIES

01	02	03	04	05	06

PACKAGE 2 in 1	PACKAGE 3 in 1
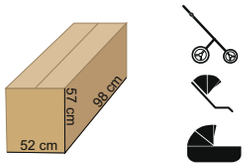	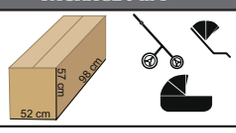
	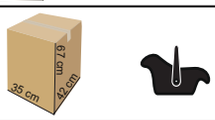

ISOFIX BASE	UNIVERSAL CAR SEAT

MIRROR DUO

JUNAMA
exclusive prams

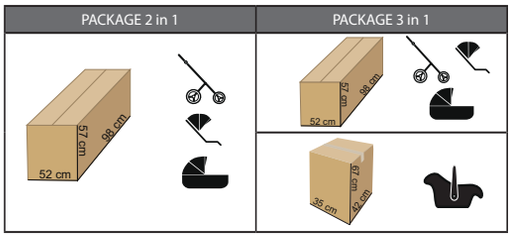

CARRYCOT VERSION

Double happiness, double joy and pride, but also double duties and challenges. In order to meet parents' expectations, we designed two models of twin carriages. Duo Slim constructed in such a way that children can sit one behind the other, another Duo model that allows you to stay side by side.

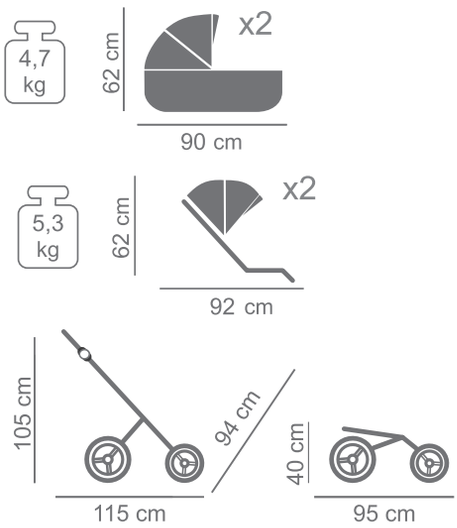

SPORT UNIT

SET 2 in 1

MIRROR DUO SLIM

Double happiness, double joy and pride, but also double duties and challenges. In order to meet parents' expectations, we designed two models of twin carriages. Duo Slim constructed in such a way that children can sit one behind the other, another Duo model that allows you to stay side by side.

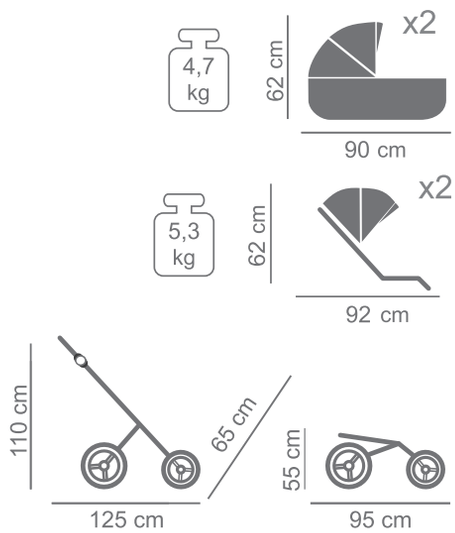

CARRYCOT VERSION

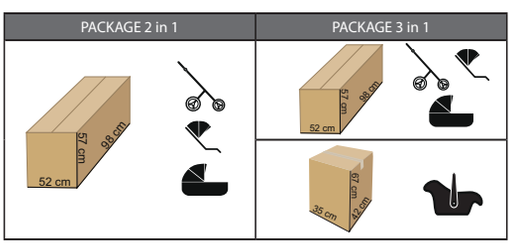

JUNAMA
exclusive prams

SPORT UNIT

SET 2 in 1

JUNAMA FLUO II

JUNAMA
exclusive prams

CARRYCOT VERSION

Which style of pram dominates this season? Sporty for lovers of an active lifestyle, glamour for fans of colors and designs, or maybe a Fluo Line stroller inspired by spunky colors and the saturation reaching the zenith.

COLORS:

SPORT UNIT

01

02

03

04

05

06

07

08

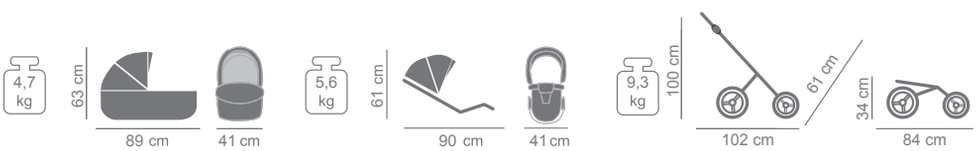

01	02	03	04	05	06	07	08

PACKAGE 2 in 1	PACKAGE 3 in 1
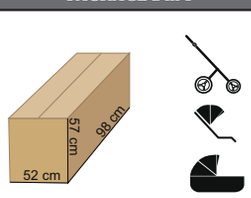	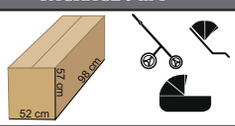 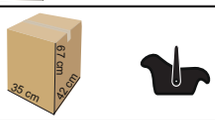

ISOFIX BASE	UNIVERSAL CAR SEAT

FLUO II DUO

JUNAMA
exclusive prams

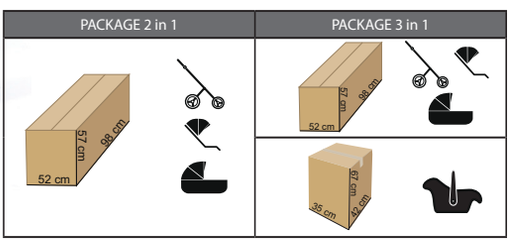

CARRYCOT VERSION

Double happiness, double joy and pride, but also double duties and challenges. In order to meet parents' expectations, we designed two models of twin carriages. Duo Slim constructed in such a way that children can sit one behind the other, another Duo model that allows you to stay side by side.

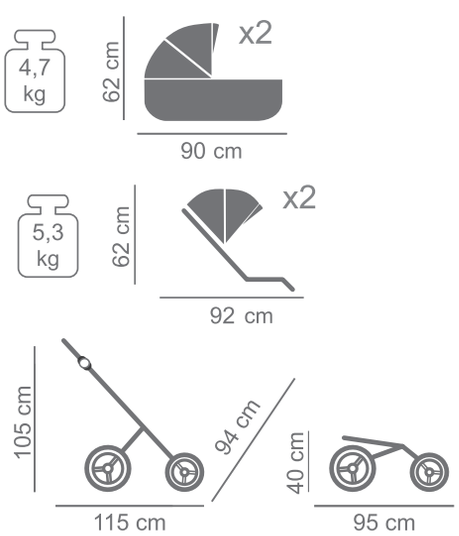

SPORT UNIT

SET 2 in 1

FLUO II DUO SLIM

Double happiness, double joy and pride, but also double duties and challenges. In order to meet parents' expectations, we designed two models of twin carriages. Duo Slim constructed in such a way that children can sit one behind the other, another Duo model that allows you to stay side by side.

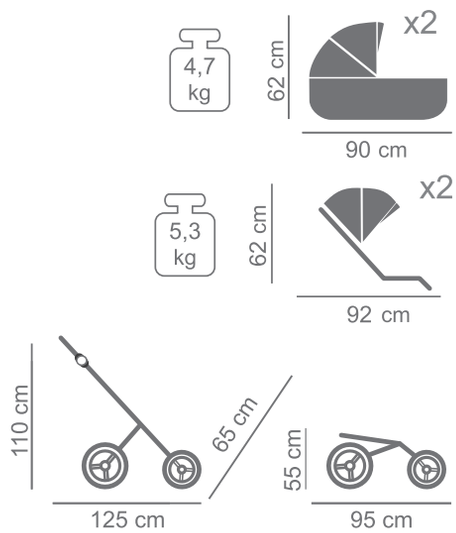

CARRYCOT VERSION

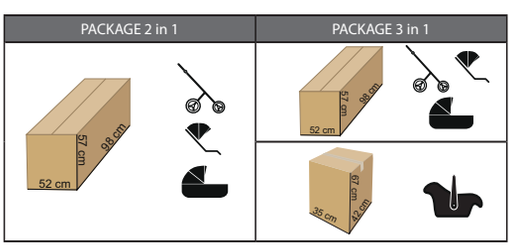

JUNAMA
exclusive prams

SPORT UNIT

SET 2 in 1

JUNAMA FLUO LINE

JUNAMA
exclusive prams

CARRYCOT VERSION

Which style of pram dominates this season? Sporty for lovers of an active lifestyle, glamour for fans of colors and designs, or maybe a Fluo Line stroller inspired by spunky colors and the saturation reaching the zenith.

COLORS:

SPORT UNIT

01

02

04

05

06

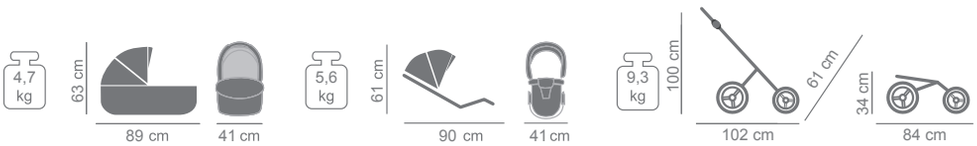

ACCESSORIES

01	02	04	05	06

PACKAGE 2 in 1	PACKAGE 3 in 1
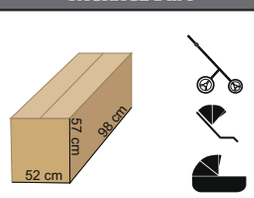	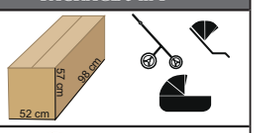
	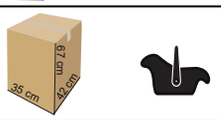

ISOFIX BASE	UNIVERSAL CAR SEAT

FLUO LINE DUO

JUNAMA
exclusive prams

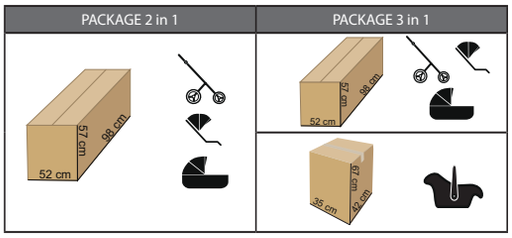

CARRYCOT VERSION

Double happiness, double joy and pride, but also double duties and challenges. In order to meet parents' expectations, we designed two models of twin carriages. Duo Slim constructed in such a way that children can sit one behind the other, another Duo model that allows you to stay side by side.

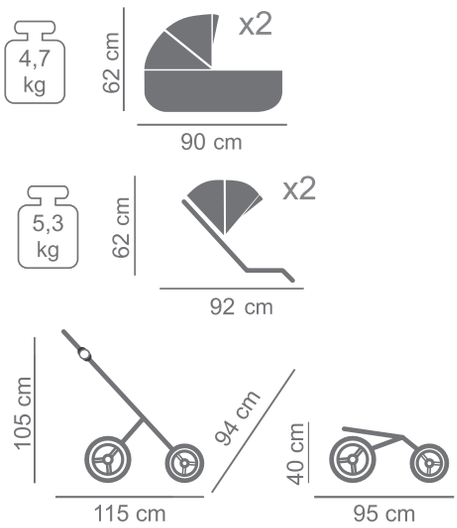

SPORT UNIT

SET 2 in 1

FLUO LINE DUO SLIM

Double happiness, double joy and pride, but also double duties and challenges. In order to meet parents' expectations, we designed two models of twin carriages. Duo Slim constructed in such a way that children can sit one behind the other, another Duo model that allows you to stay side by side.

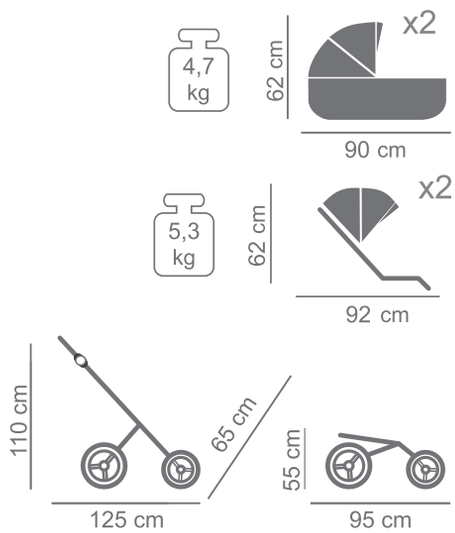

CARRYCOT VERSION

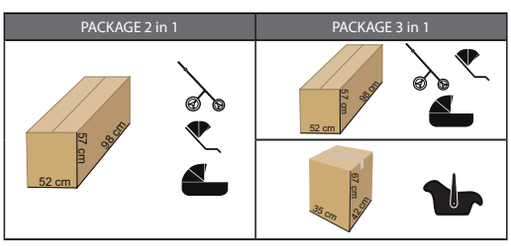

JUNAMA
exclusive prams

SPORT UNIT

ONYX

JUNAMA
exclusive prams

CARRYCOT VERSION

SPORT UNIT

COLORS:

01

02

03

04

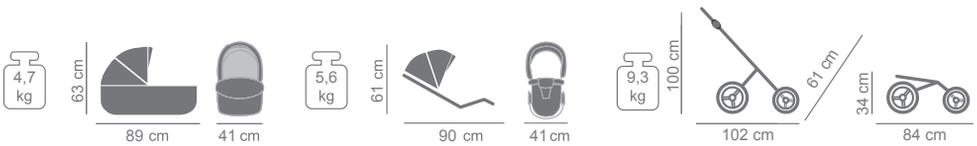

ACCESSORIES

01	02	03	04

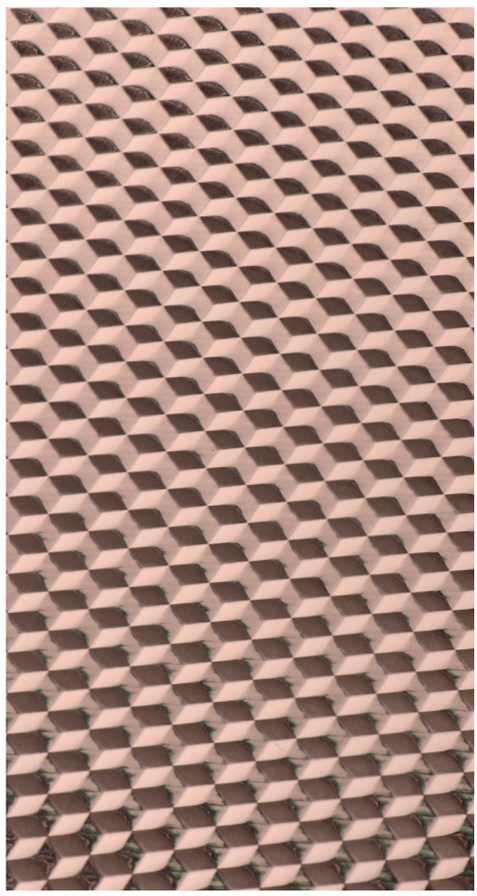

PACKAGE 2 in 1	PACKAGE 3 in 1
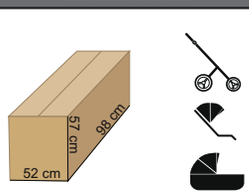	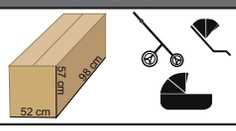
	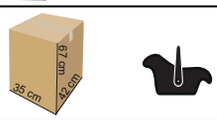

ISOFIX BASE	UNIVERSAL CAR SEAT

ONYX DUO

JUNAMA
exclusive prams

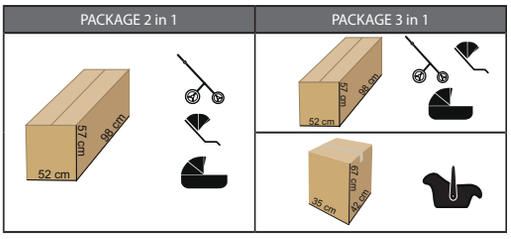

CARRYCOT VERSION

Double happiness, double joy and pride, but also double duties and challenges. In order to meet parents' expectations, we designed two models of twin carriages. Duo Slim constructed in such a way that children can sit one behind the other, another Duo model that allows you to stay side by side.

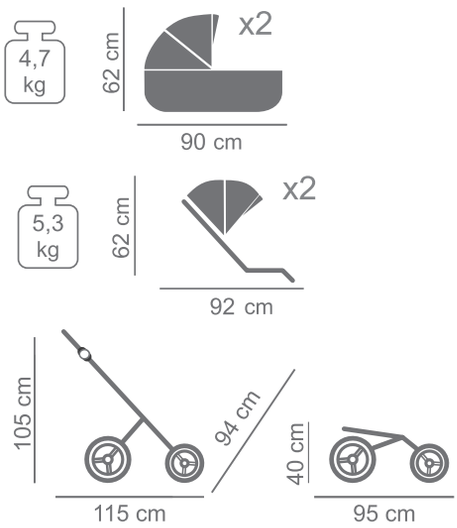

SPORT UNIT

SET 2 in 1

ONYX DUO SLIM

Double happiness, double joy and pride, but also double duties and challenges. In order to meet parents' expectations, we designed two models of twin carriages. Duo Slim constructed in such a way that children can sit one behind the other, another Duo model that allows you to stay side by side.

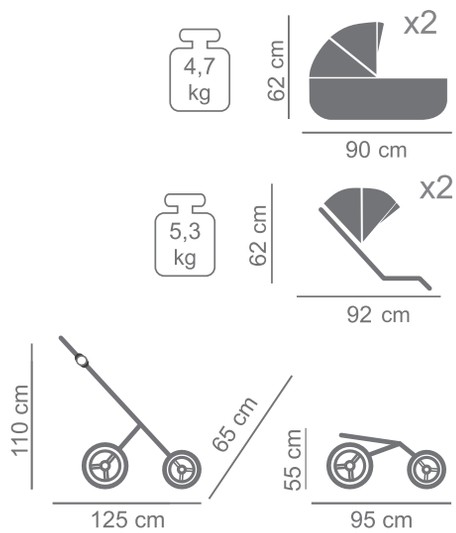

CARRYCOT VERSION

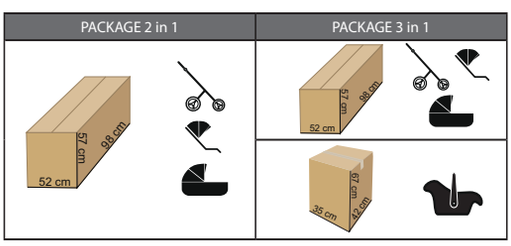

JUNAMA
exclusive prams

SPORT UNIT

SET 2 in 1

GLOW

JUNAMA
exclusive prams

CARRYCOT VERSION

SPORT UNIT

COLORS:

01

02

03

04

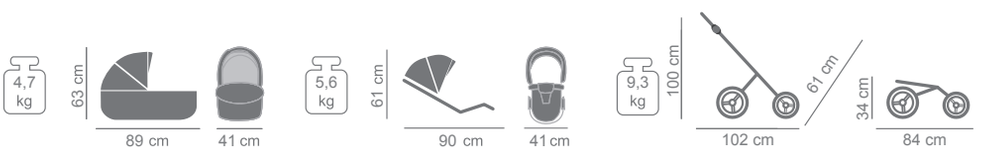

01	02	03	04

PACKAGE 2 in 1	PACKAGE 3 in 1
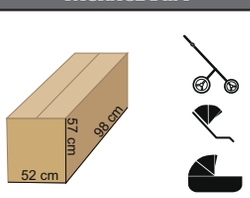	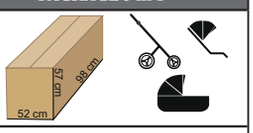
	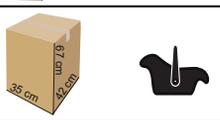

ISOFIX BASE	UNIVERSAL CAR SEAT

GLOW DUO

JUNAMA
exclusive prams

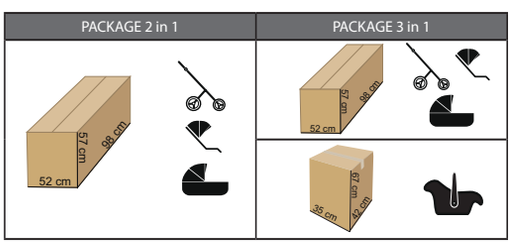

CARRYCOT VERSION

Double happiness, double joy and pride, but also double duties and challenges. In order to meet parents' expectations, we designed two models of twin carriages. Duo Slim constructed in such a way that children can sit one behind the other, another Duo model that allows you to stay side by side.

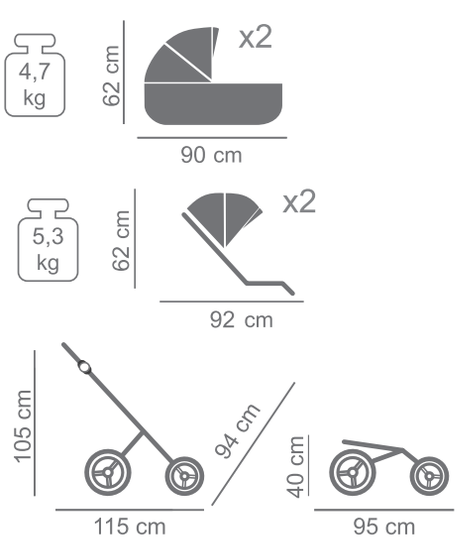

SPORT UNIT

SET 2 in 1

GLOW DUO SLIM

Double happiness, double joy and pride, but also double duties and challenges. In order to meet parents' expectations, we designed two models of twin carriages. Duo Slim constructed in such a way that children can sit one behind the other, another Duo model that allows you to stay side by side.

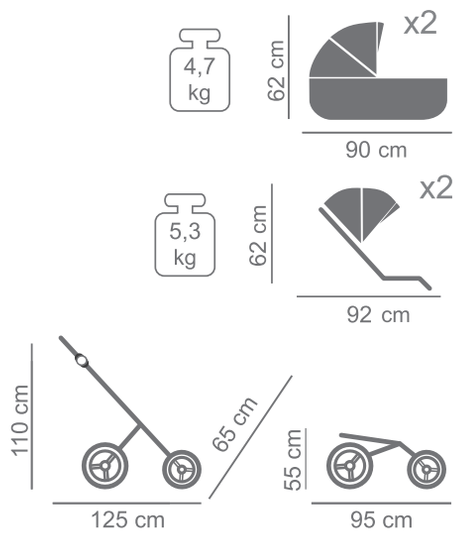

CARRYCOT VERSION

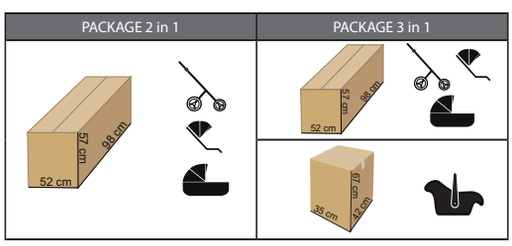

JUNAMA
exclusive prams

SPORT UNIT

SET 2 in 1

SAPHIRE

JUNAMA
exclusive prams

CARRYCOT VERSION

COLORS:

SPORT UNIT

01

02

03

04

06

07

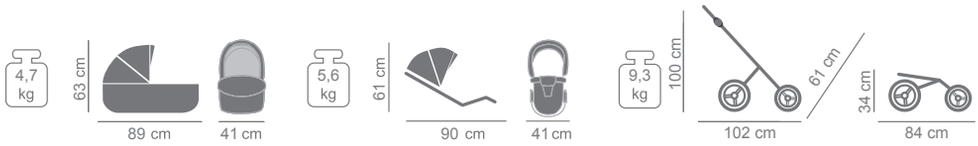

01	02	03	04	06	07

PACKAGE 2 in 1	PACKAGE 3 in 1
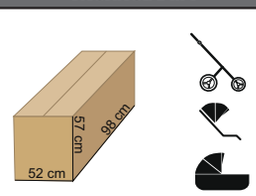	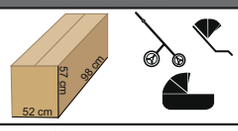 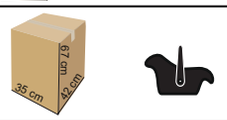

ISOFIX BASE	UNIVERSAL CAR SEAT

SAPHIRE DUO

JUNAMA
exclusive prams

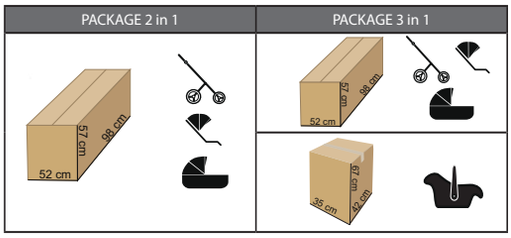

CARRYCOT VERSION

Double happiness, double joy and pride, but also double duties and challenges. In order to meet parents' expectations, we designed two models of twin carriages. Duo Slim constructed in such a way that children can sit one behind the other, another Duo model that allows you to stay side by side.

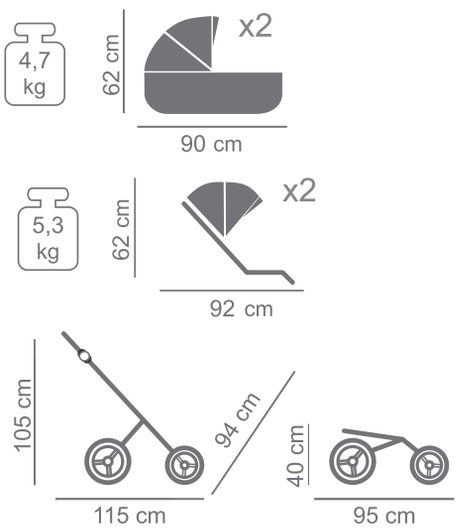

SPORT UNIT

SET 2 in 1

SAPHIRE DUO SLIM

Double happiness, double joy and pride, but also double duties and challenges. In order to meet parents' expectations, we designed two models of twin carriages. Duo Slim constructed in such a way that children can sit one behind the other, another Duo model that allows you to stay side by side.

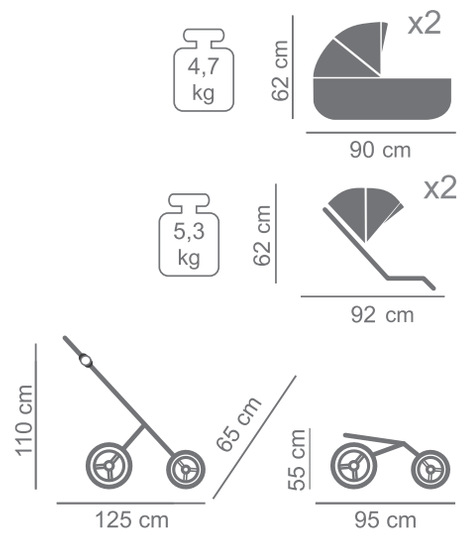

CARRYCOT VERSION

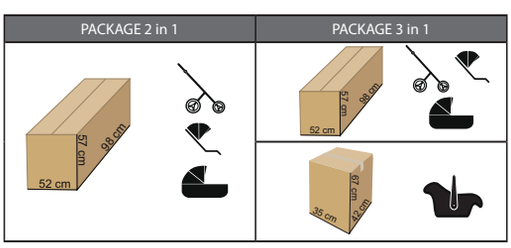

JUNAMA
exclusive prams

SPORT UNIT

JUNAMA
exclusive prams

CARRYCOT VERSION

SPORT UNIT

COLORS:

01

02

03

04

05

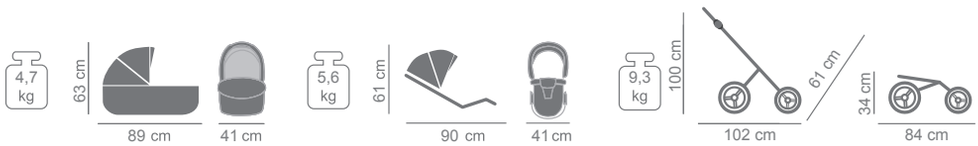

01	02	03	04	05

PACKAGE 2 in 1	PACKAGE 3 in 1
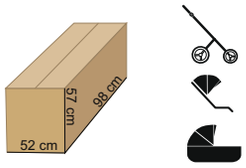	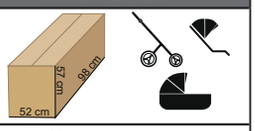
	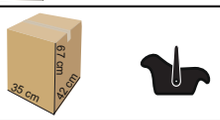

ISOFIX BASE	UNIVERSAL CAR SEAT

CANDY DUO

JUNAMA
exclusive prams

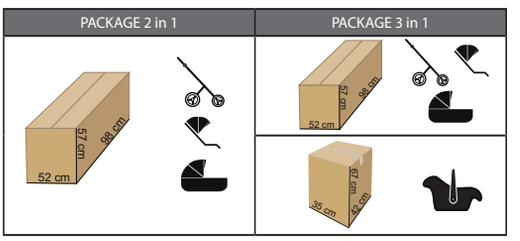

CARRYCOT VERSION

Double happiness, double joy and pride, but also double duties and challenges. In order to meet parents' expectations, we designed two models of twin carriages. Duo Slim constructed in such a way that children can sit one behind the other, another Duo model that allows you to stay side by side.

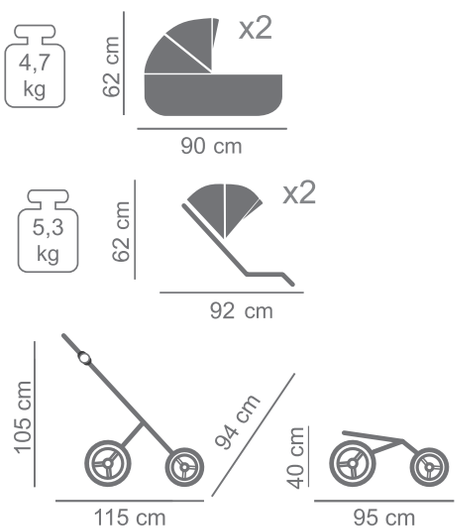

SPORT UNIT

SET 2 in 1

CANDY DUO SLIM

Double happiness, double joy and pride, but also double duties and challenges. In order to meet parents' expectations, we designed two models of twin carriages. Duo Slim constructed in such a way that children can sit one behind the other, another Duo model that allows you to stay side by side.

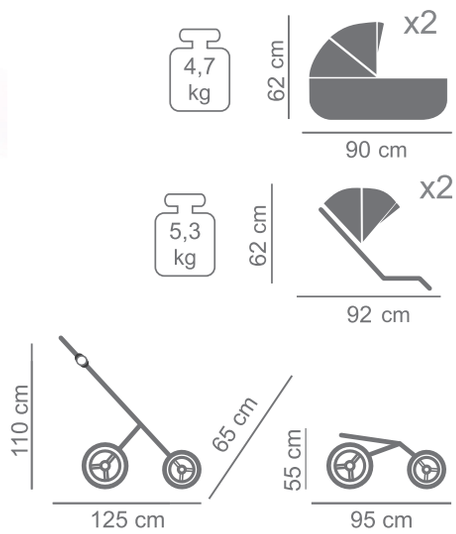

CARRYCOT VERSION

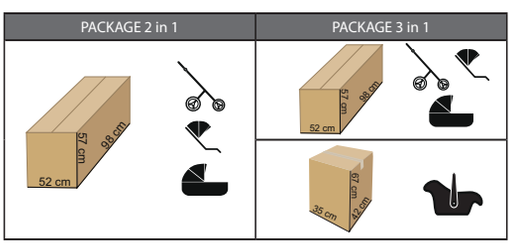

JUNAMA
exclusive prams

SPORT UNIT

JUNAMA
exclusive prams

42-229 Częstochowa
ul. Jagiellońska 77/79
POLAND
tel: +48 34 371 12 70
www.junama.com

info@junama.com
polish:
+48 668 690 733
+48 664 027 074
+48 668 690 732
+48 668 680 725
+48 785 553 790
+48 668 690 730

english@junama.com
english:
+48 668 690 755
+48 668 690 720
+48 668 690 721
+48 668 690 730

italy@junama.com
italian:
+48 668 690 721
+48 668 690 720

germany@junama.com
deutsch:
+48 795 481 553

russia@junama.com
russian:
+48 668 690 733
+48 785 051 560
+48 668 690 720

www.junama.com

instagram.com/junama.official

facebook.com/junama.wozki/

youtube.com