PRODUCER OF PRAMS
AND ARTICLES FOR
CHILDREN

TAKO BABY

exclusive prams

CATALOGUE **2020**

PL

TAKO to wiodący polski producent wózków i artykułów dla dzieci. Nasze produkty wyróżnia najwyższa jakość, innowacyjność oraz oryginalny styl, dlatego od 30 lat cieszymy się niesłabnącym uznaniem klientów na całym świecie. Wózki naszej firmy tworzone są przez doświadczonych konstruktorów przy użyciu najwyższej klasy materiałów. Dzięki temu produkty sygnowane marką TAKO spełniają wszystkie normy bezpieczeństwa. Nasze zaangażowanie w produkcję najlepszych na rynku produktów dziecięcych pozwoliło nam uzyskać pozycję lidera wśród producentów, dlatego zachęcamy abyś i Ty poznał nas bliżej…

IT

TAKO è il principale produttore polacco di passeggini ed articoli per bambini. I nostri prodotti si distinguono per la massima qualità, per l'innovazione e per lo stile originale, per questo motivo da 30 anni il nostro marchio è riconosciuto da clienti di tutto il mondo. I nostri passeggini sono creati da esperti costruttori utilizzando materiali di altissima qualità. Grazie a questo i prodotti del marchio TAKO rispettano tutte le norme di sicurezza. Il nostro impegno nella produzione dei migliori prodotti per bambini presenti sul mercato ci ha permesso di ottenere una posizione di leader tra i produttori. Ti invitiamo percio' a conoscere meglio la nostra azienda...

ENG

TAKO is leading manufacturer of prams and baby articles. Our products stand out by the highest quality, innovation, and original design. For that reason for 30 years we continue to have unflagging recognition around the world. Our carriages are made by experienced engineers who use the highest quality materials. That allows all products marked with TAKO brand to meet all safety standards. Our involvement in production of the best products on the market allowed us to reach leading position among manufacturers. We kindly encourage you to get closer look at our company…

TAKO BABY
exclusive prams

ES

TAKO es un fabricante polaco líder de cochecitos y productos para bebés. Nuestros productos se distinguen por la más alta calidad, innovación y estilo original, por lo que hemos disfrutado del reconocimiento inquebrantable de los clientes en todo el mundo durante 30 años. Los carros de nuestra empresa son creados por diseñadores experimentados,utilizamos los materiales de la más alta calidad. Gracias a esto, los productos de la marca TAKO cumplen con todos los estándares de seguridad. Nuestro compromiso de producir los mejores productos para niños en el mercado nos ha permitido convertirnos en un líder entre los fabricantes, por eso lo alentamos a que nos conozca mejor…

42-229 Częstochowa
ul. Jagiellońska 77/79
POLAND
tel: +48 34 371 12 70
www.tako-poland.eu

DE

TAKO ist ein führender polnischer Hersteller von Kinderwagen und Babyartikel. Unsere Produkte zeichnen sich durch höchste Qualität, Innovation und originellen Stil aus, deshalb freuen wir uns seit 30 Jahren über uneingeschränkte Anerkennung von Kunden auf der ganzen Welt. Kinderwagen Marke Tako werden von erfahrenen Designern konstruiert aus Materialien mit höchster Qualität hergestellt. Alle Produkte erfüllen die gesetzlichen Sicherheitsstandards. Unsere Engagement für die Herstellung der besten Kinderprodukte hat es uns ermöglicht, eine führende Position unter den Herstellern einzunehmen. Deshalb möchten wir Sie einladen, uns besser kennenzulernen…

RUS

ТАКО – ведущий производитель колясок и товаров для детей. Наши продукты известны благодаря высокому качеству, инновационному и оригинальному дизайну. Благодаря этим качествам компания удерживает свою лидерскую позицию на мировом рынке уже более 30 лет. Коляски ТАКО разработаны высококвалифицированными дизайнерами и технологами, использующими материалы высшего качества. Благодаря этому наши продукты соответствуют всем необходимым стандартам безопасности. Наша компания прилагает максимум усилий для того чтобы создать флагманский детский продукт.

TAKO BABY
exclusive prams

CARRYCOT VERSION

Tako Imperial is the result of experienced specialists work during the years. Built with carefully selected materials, it is characterized by avant-garde stylistics, attractive colors and a large range of accessories.

COLORS:

SPORT UNIT

02

03

04

06

07

08

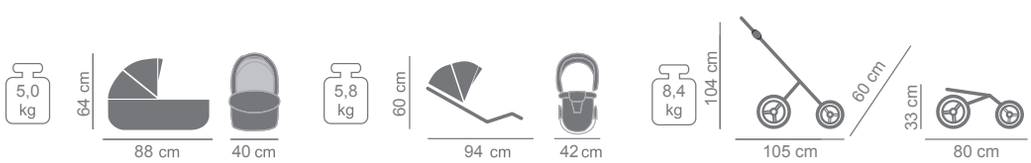

ACCESSORIES

02	03	04	06	07	08

PACKAGE 2 in 1	PACKAGE 3 in 1
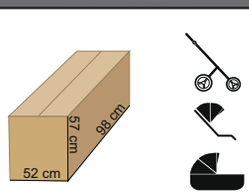	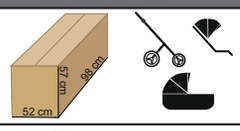
	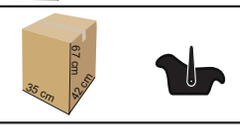

ISOFIX BASE	UNIVERSAL CAR SEAT

FEATURES
OF OUR PRAMS

TAKO BABY
exclusive prams

carrycott version

FEATURES
OF OUR PRAMS

sport unit

IMPERIAL DUO

TAKO BABY
exclusive prams

CARRYCOT VERSION

Double happiness, double joy and pride, but also double duties and challenges. In order to meet parents' expectations, we designed two models of twin carriages. Duo Slim constructed in such a way that children can sit one behind the other, another Duo model that allows you to stay side by side.

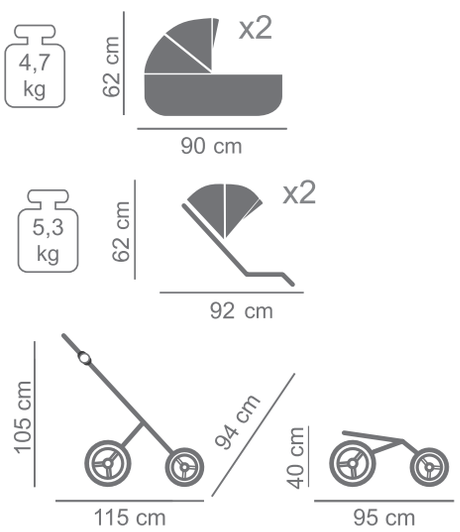

SPORT UNIT

SET 2 in 1

IMPERIAL DUO SLIM

Double happiness, double joy and pride, but also double duties and challenges. In order to meet parents' expectations, we designed two models of twin carriages. Duo Slim constructed in such a way that children can sit one behind the other, another Duo model that allows you to stay side by side.

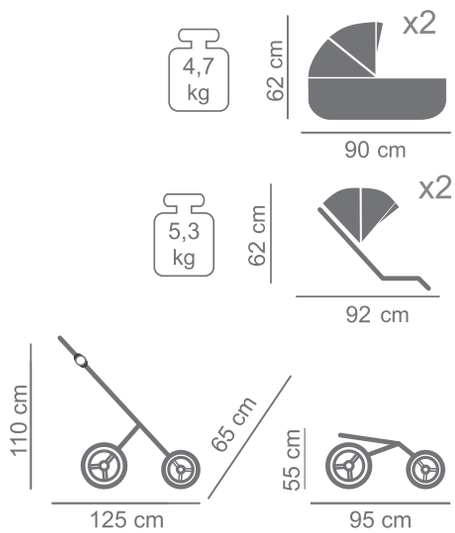

CARRYCOT VERSION

TAKO BABY
exclusive prams

SPORT UNIT

SET 2 in 1

CORONA

TAKO BABY
exclusive prams

CARRYCOT VERSION

Versatility, reliability, solidity and functionality are the main synonymous of our products. We create unique prams to meet expectations to the most demanded parents. Safety and comfort of a baby are our main targets thus we pay attention to the smallest details, provide maximum commitment and responsibility to each product we create.

COLORS:

01

02

03

SPORT UNIT

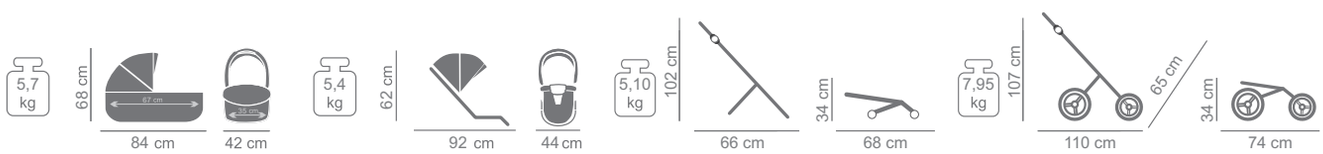

ACCESSORIES

01	02	03

PACKAGE 2 in 1	PACKAGE 3 in 1
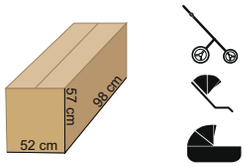	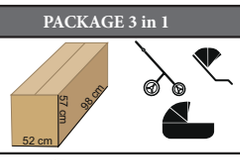
	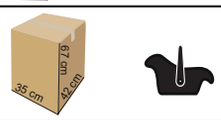

ISOFIX BASE	UNIVERSAL CAR SEAT

CORONA DUO

TAKO BABY
exclusive prams

CARRYCOT VERSION

Double happiness, double joy and pride, but also double duties and challenges. In order to meet parents' expectations, we designed two models of twin carriages. Duo Slim constructed in such a way that children can sit one behind the other, another Duo model that allows you to stay side by side.

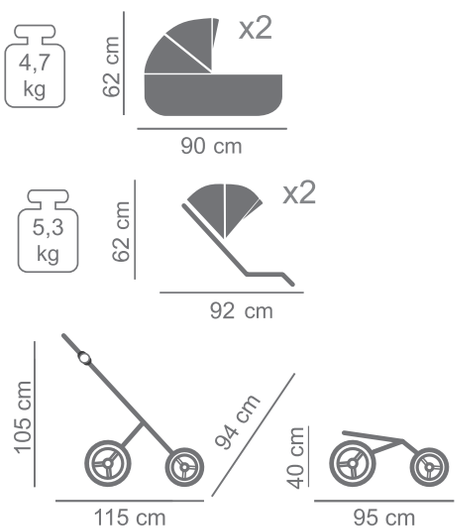

SPORT UNIT

SET 2 in 1

CORONA DUO SLIM

Double happiness, double joy and pride, but also double duties and challenges. In order to meet parents' expectations, we designed two models of twin carriages. Duo Slim constructed in such a way that children can sit one behind the other, another Duo model that allows you to stay side by side.

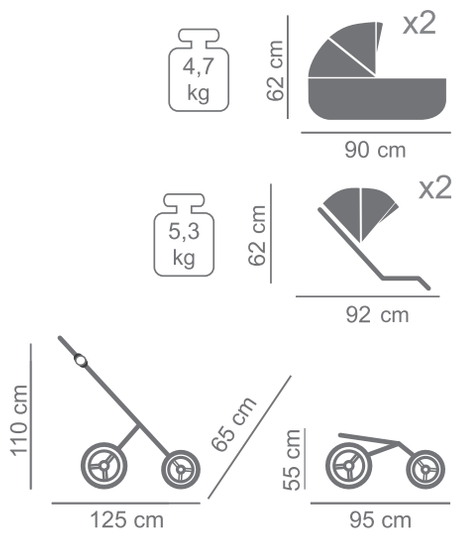

CARRYCOT VERSION

TAKO BABY
exclusive prams

SPORT UNIT

SET 2 in 1

CORONA ECO

TAKO BABY
exclusive prams

CARRYCOT VERSION

Versatility, reliability, solidity and functionality are the main synonymous of our products. We create unique prams to meet expectations to the most demanded parents. Safety and comfort of a baby are our main targets thus we pay attention to the smallest details, provide maximum commitment and responsibility to each product we create.

COLORS:

SPORT UNIT

01

02

03

04

05

06

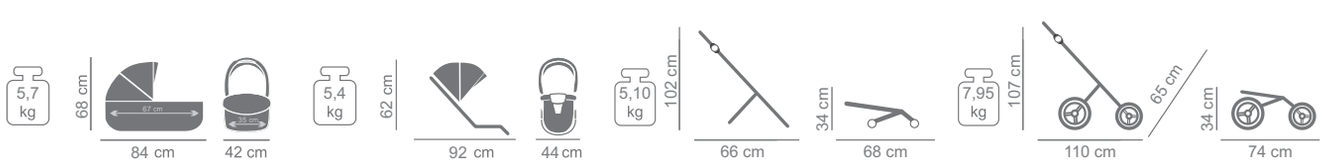

01	02	03	04	05	06

PACKAGE 2 in 1	PACKAGE 3 in 1
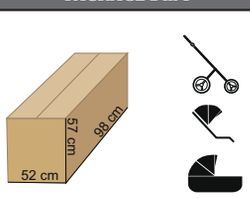	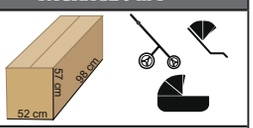
	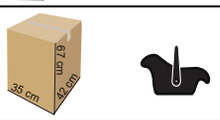

ISOFIX BASE	UNIVERSAL CAR SEAT

SET 2 in 1

CORONA ECO DUO

TAKO BABY
exclusive prams

CARRYCOT VERSION

Double happiness, double joy and pride, but also double duties and challenges. In order to meet parents' expectations, we designed two models of twin carriages. Duo Slim constructed in such a way that children can sit one behind the other, another Duo model that allows you to stay side by side.

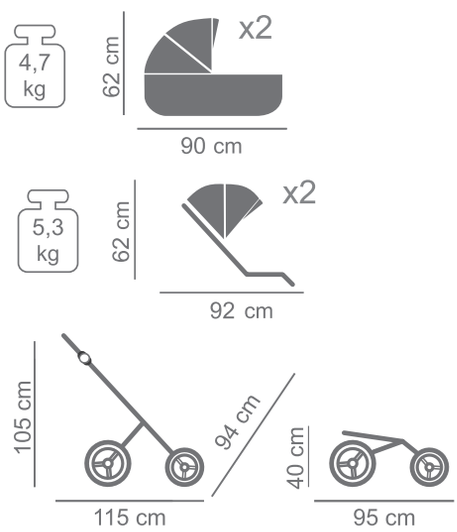

SPORT UNIT

SET 2 in 1

CORONA ECO DUO SLIM

Double happiness, double joy and pride, but also double duties and challenges. In order to meet parents' expectations, we designed two models of twin carriages. Duo Slim constructed in such a way that children can sit one behind the other, another Duo model that allows you to stay side by side.

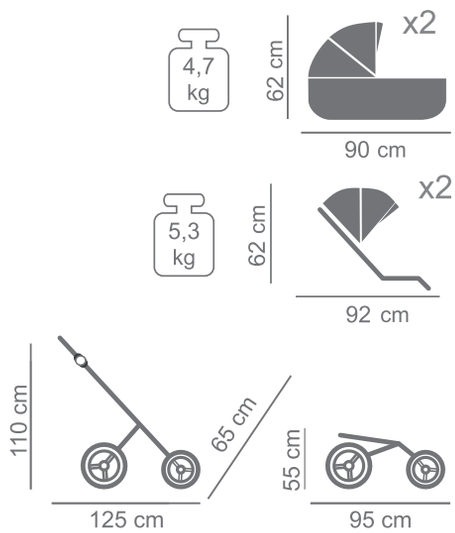

CARRYCOT VERSION

TAKO BABY
exclusive prams

SPORT UNIT

SET 2 in 1

CORONA LITE

TAKO BABY
exclusive prams

CARRYCOT VERSION

Versatility, reliability, solidity and functionality are the main synonymous of our products. We create unique prams to meet expectations to the most demanded parents. Safety and comfort of a baby are our main targets thus we pay attention to the smallest details, provide maximum commitment and responsibility to each product we create.

COLORS:

SPORT UNIT

01

02

03

06

07

08

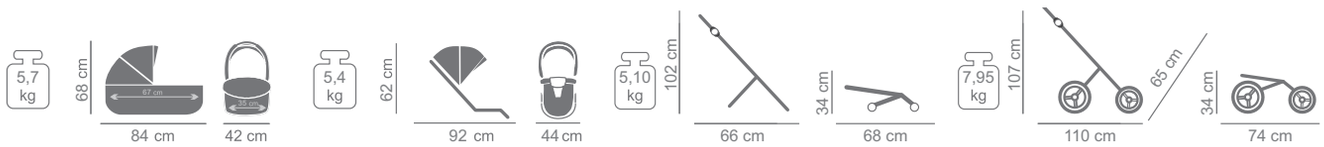

ACCESSORIES

01	02	03	06	07	08

PACKAGE 2 in 1	PACKAGE 3 in 1
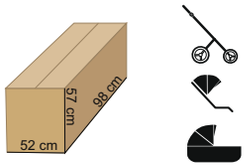	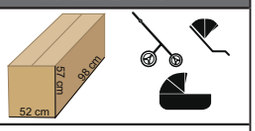
	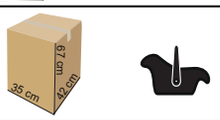

ISOFIX BASE	UNIVERSAL CAR SEAT

SET 2 in 1

CORONA LITE DUO

TAKO BABY
exclusive prams

CARRYCOT VERSION

Double happiness, double joy and pride, but also double duties and challenges. In order to meet parents' expectations, we designed two models of twin carriages. Duo Slim constructed in such a way that children can sit one behind the other, another Duo model that allows you to stay side by side.

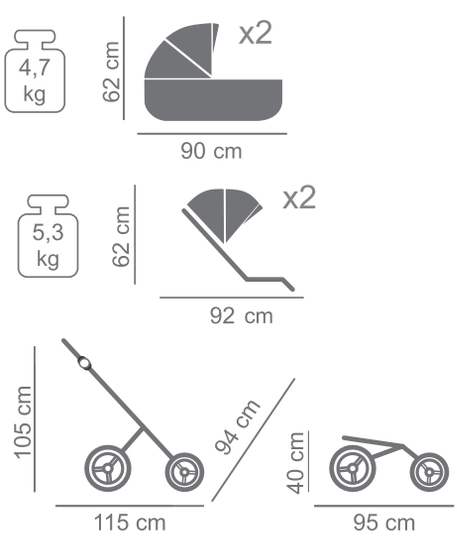

SPORT UNIT

SET 2 in 1

CORONA LITE DUO SLIM

Double happiness, double joy and pride, but also double duties and challenges. In order to meet parents' expectations, we designed two models of twin carriages. Duo Slim constructed in such a way that children can sit one behind the other, another Duo model that allows you to stay side by side.

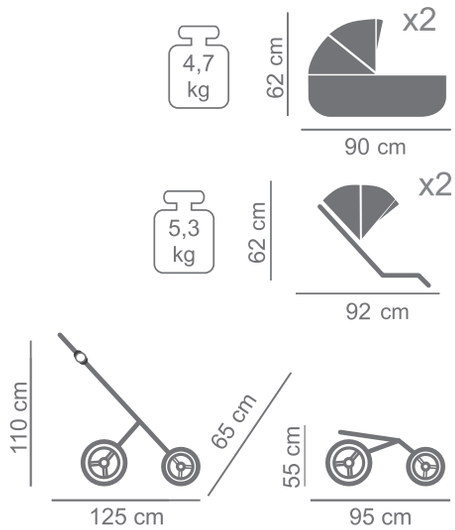

CARRYCOT VERSION

TAKO BABY
exclusive prams

SPORT UNIT

TAKO BABY
exclusive prams

42-229 Częstochowa
ul. Jagiellońska 77/79
POLAND
tel: +48 34 371 12 70
www.tako-poland.eu

info@tako.net.pl
polish:
+48 668 690 733
+48 664 027 074
+48 668 690 732
+48 668 680 725
+48 785 553 790
+48 668 690 730

english@tako.net.pl
english:
+48 668 690 755
+48 668 690 720
+48 668 690 721
+48 668 690 730

italy@tako.net.pl
italian:
+48 668 690 721
+48 668 690 720

germany@tako.net.pl
deutsch:
+48 795 481 553

russia@tako.net.pl
russian:
+48 668 690 733
+48 785 051 560
+48 668 690 720

www.tako-poland.eu

instagram.com/tako_life

youtube.com/takopolandeu

facebook.com/TAKOnetpl